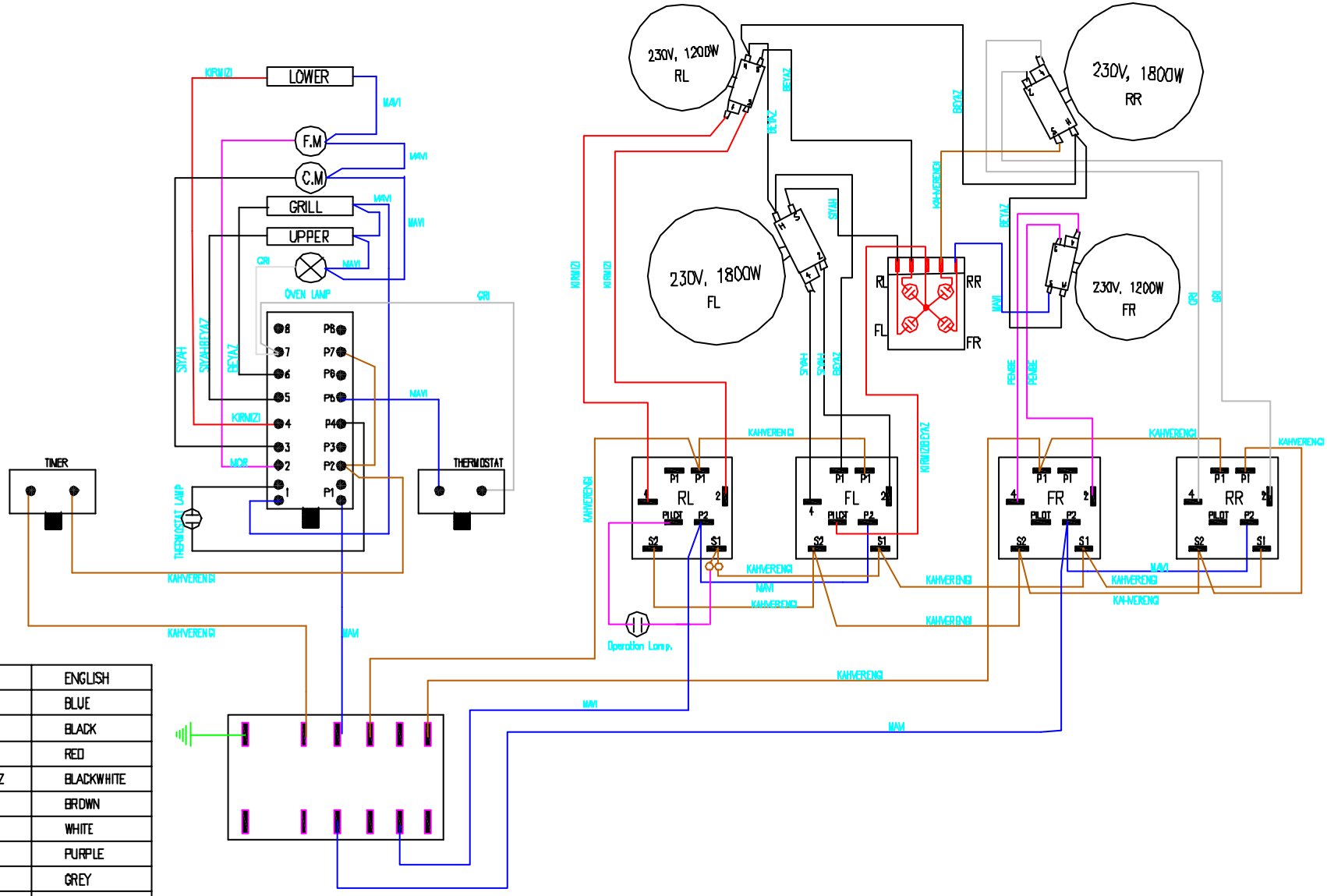

TURKCE	ENGLISH
MAVI	BLUE
SIYAH	BLACK
KIRMIZI	RED
SIYAHBEYAZ	BLACKWHITE
KAHVE	BRDWN
BEYAZ	WHITE
MOR	PURPLE
GRI	GREY
PENBE	PINK
KIRMIZIBEYAZ	REDWHITE
MAVIBEYAZ	BLUEWHITE
KAHVEBEYAZ	BRDWNWHITE